PART NO. 3968xxHB001

DWG NO. C3968HB

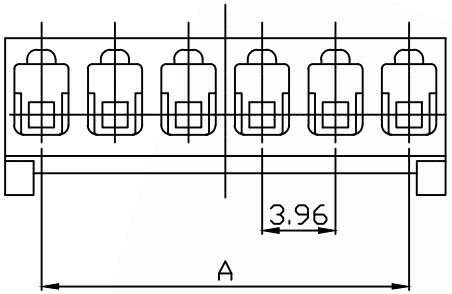

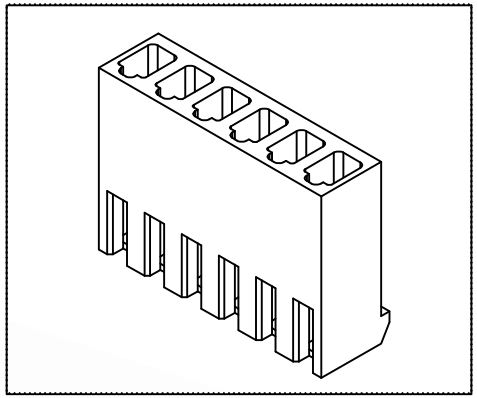

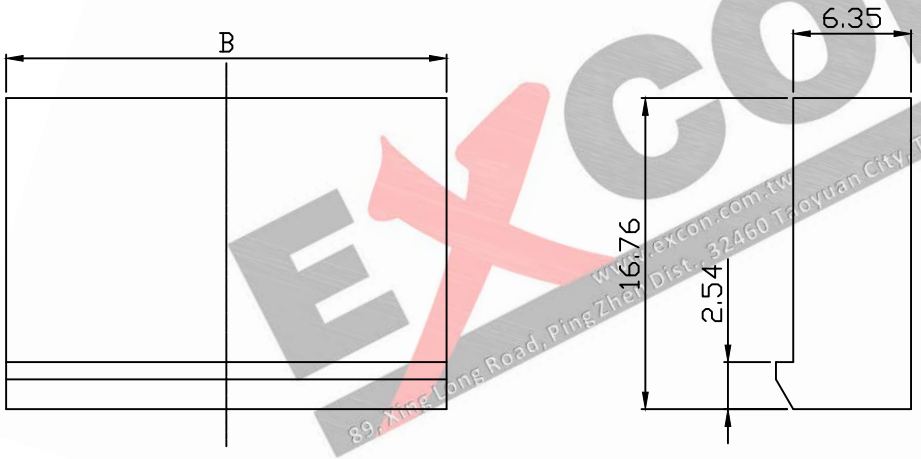

Dimensional & Ordering Information:

Part No.	Circuits	Dim A	Dim B
396802HB001	2	3.96	7.92
396803HB001	3	7.92	11.88
396804HB001	4	11.88	15.84
396805HB001	5	15.84	19.80
396806HB001	6	19.80	23.76
396807HB001	7	23.76	27.72
396808HB001	8	27.72	31.68
396809HB001	9	31.68	35.64
396810HB001	10	35.64	39.60
396811HB001	11	39.60	43.56
396812HB001	12	43.56	47.52
396813HB001	13	47.52	51.48
396814HB001	14	51.48	55.44
396815HB001	15	55.44	59.40
396816HB001	16	59.40	63.36
396817HB001	17	63.36	67.32
396818HB001	18	67.32	71.28
396819HB001	19	71.28	75.24
396820HB001	20	75.24	79.20
396821HB001	21	79.20	83.16
396822HB001	22	83.16	87.12
396823HB001	23	87.12	91.08
396824HB001	24	91.08	95.04

NOTE:

1. Housing Material: Nylon 66 UL94V0
2. Color: Natural
3. Withstand voltage: 1000V AC/minute.
4. Current rating: 3A AC/DC.
5. Voltage rating: 250V AC/DC

REV.	REVISIONI	DIS	DATE

UNLESS OTHERWISE SPECIFIED TOLERANCES
3 PLACE ±0.5 ±0.10
2 PLACE ±1.5 ±0.255
1 PLACE ±2.0 ±0.50
ANGLE DIM

EXCON TECHNOLOGY COMPANY

SCALE	REV.	PAGE:	UNIT mm	DWG NO:	PART.NO
NONE	B	1	THIRD ANGLE PROJECTION	C3968HB	3968xxHB001

EXCON
www.excon.com.tw
89, Xing Long Road, Ping Zhen Dist., 32460 Taoyuan City, Taiwan (R.O.C)